DB37-IC-7800 Cable

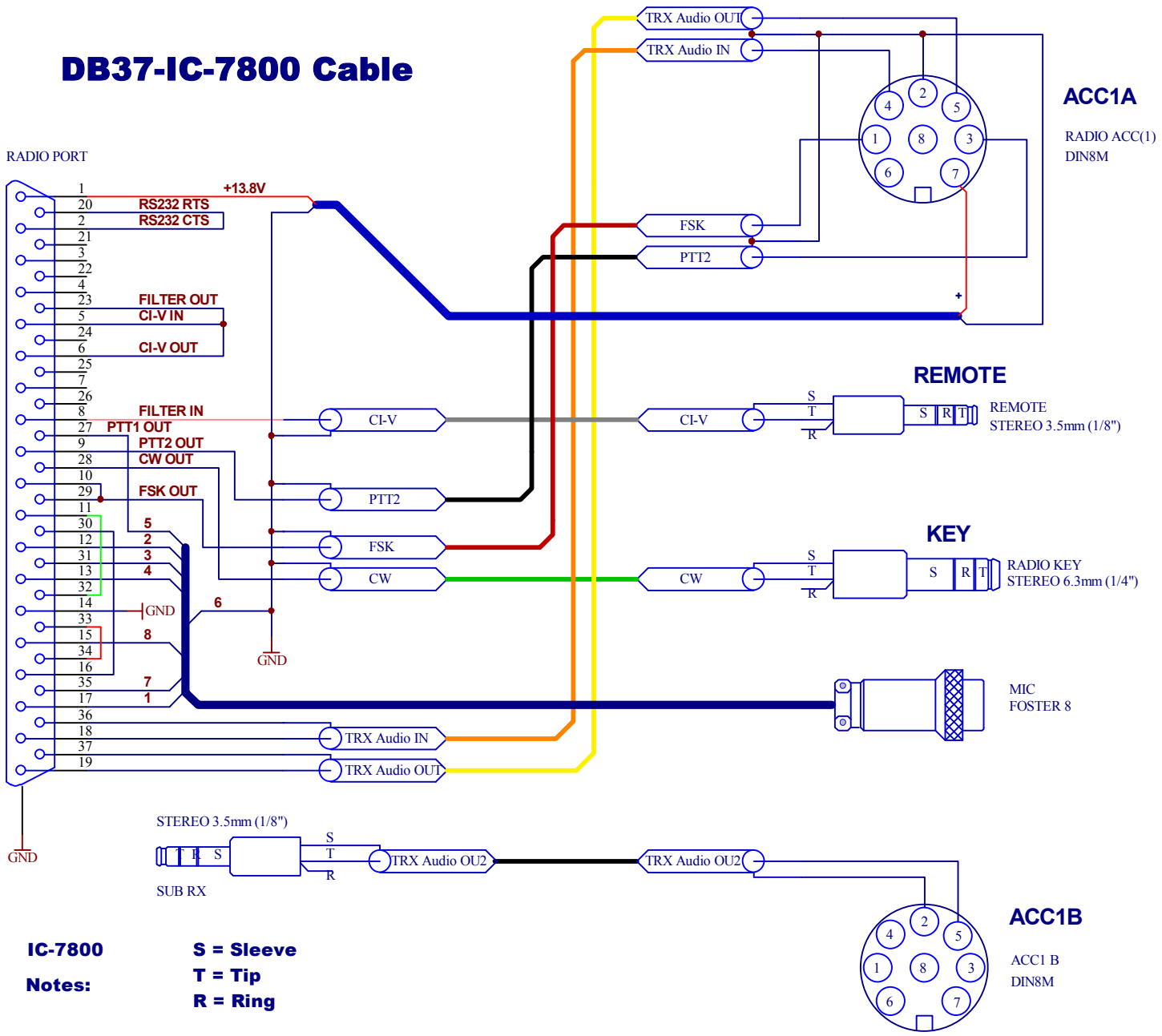

IC-7800

Notes:

S = Sleeve
T = Tip
R = Ring